THE INFORMATION CONTAINED IN THIS DRAWING IS THE SOLE PROPERTY OF CIS. ANY REPRODUCTION IN PART OR WHOLE WITHOUT WRITTEN PERMISSION OF CIS IS PROHIBITED .

REVISIONS					
ECN/ECO	PLACES	REV.	DESCRIPTION	SIGN	DATE
		E1	Design Release	Wanbin Liu	2019.3.26

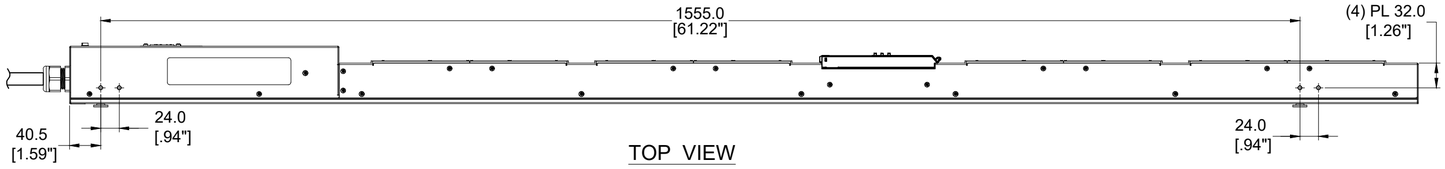

TOP VIEW

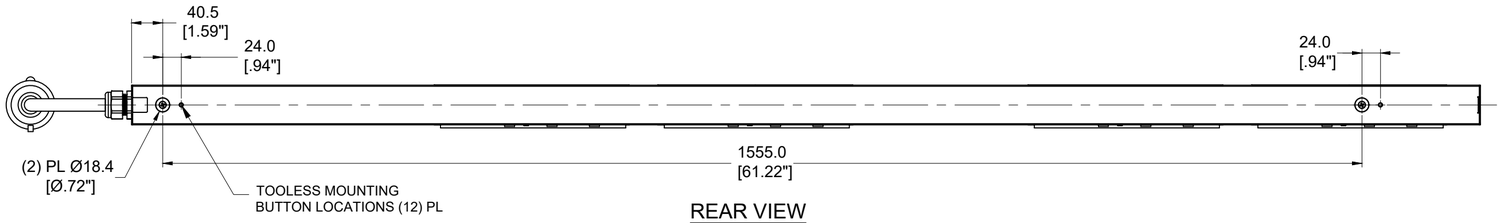

REAR VIEW

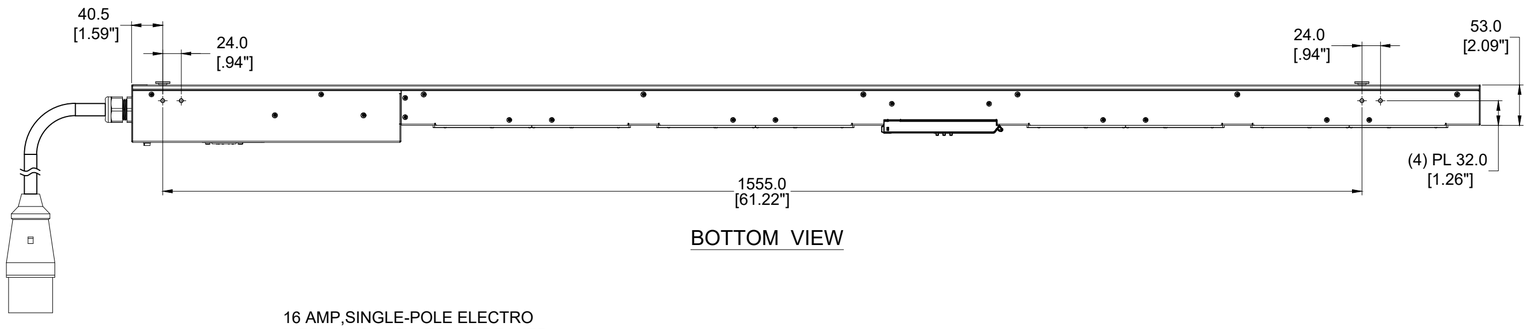

BOTTOM VIEW

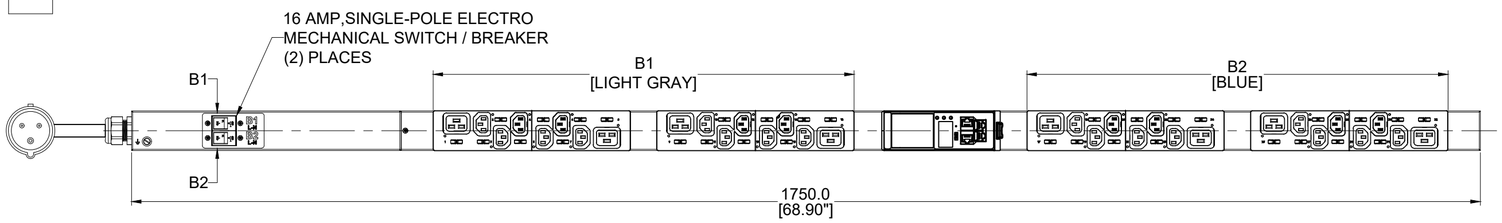

FRONT VIEW

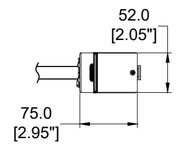

RIGHT VIEW

SPECIFICATION:

1. STANDARD:

UNIT TYPE:	MONITORED & SWITCHED PER OUTLET
ORIENTATION:	VERTICAL, 0U FULL
OUTLET QTY & TYPE:	(24)C13, (8)C19
INPUT VOLTAGE:	100-240VAC
INPUT CURRENT:	32A
BREAKER QTY & TYPE:	(2) 16AMP, SINGLE-POLE
INPUT PHASE:	SINGLE-PHASE
RATED POWER:	7.4 KVA
INPUT PLUG:	IEC 60309 2P+E 6H 32A
INPUT POWER CORD:	3m[10'], TOP FEED
REGULATORY STANDARD:	RoHS COMPLIANT

PLUG/RECEPTACLE BLOCK

PLUG
IEC 60309, 2P 3W, 6H
IP44 (SPLASHPROOF)
32A, 200 250V MAX RATED INPUT

RECEPTACLES
IEC 60320/C19
16A, 250V MAX RATED OUTPUT

RECEPTACLES
IEC 60320/C13
10A, 250V MAX RATED OUTPUT

UNLESS NOTED, DIMENSIONS IN MILLIMETERS & TOLERANCES ARE:

X.	± 1	MM	X°	± 1°
X.X	± 0.5	MM	X.X°	± 0.5°
X.XX	± 0.20	MM		
ØX.X	± 0.4	MM		
ØX.XX	± 0.20	MM		

BRACKETED DIMENSIONS ARE IN INCHES FOR REFERENCE ONLY

THIRD ANGLE PROJECTION

IF 2D AND 3D DIFFER, 2D SHALL TAKE PRECEDENCE

DESIGNER & DATE:	Wanbin Liu	2019-3-26
STANDARDIZATION/CHECKER & DATE:	Hanson Xu	2019-3-28
DFM & DATE:	Talon Lv	2019-3-28
APPROVER & DATE:	Kanson Ren	2019-3-28
ITEM WEIGHT (REFERENCE ONLY):		
MATERIAL:	Assembly	

ASIA PACIFIC CIS
WUXI CHINA

DESCRIPTION: EN2.0 PDU

P/N: TA-EN6329

REV: E1

SCALE 1:5 (DO NOT SCALE DRAWING) SIZE: A2 SHEET 1 OF 2

THE INFORMATION CONTAINED IN THIS DRAWING IS THE SOLE PROPERTY OF CIS. ANY REPRODUCTION IN PART OR WHOLE WITHOUT WRITTEN PERMISSION OF CIS IS PROHIBITED .

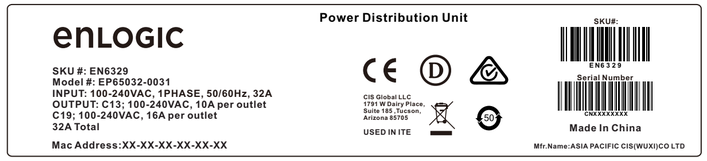

COMPLIANCE LABEL

NOTES:

1. INTERNAL WIRING:

WIRE TYPE:	UL AWM 1015, 10 & 12 & 18AWG
LINE 1/R/X COLOR:	BROWN
EARTH GROUND COLOR:	GREEN/YELLOW STRIPE
NEUTRAL WIRE COLOR:	BLUE

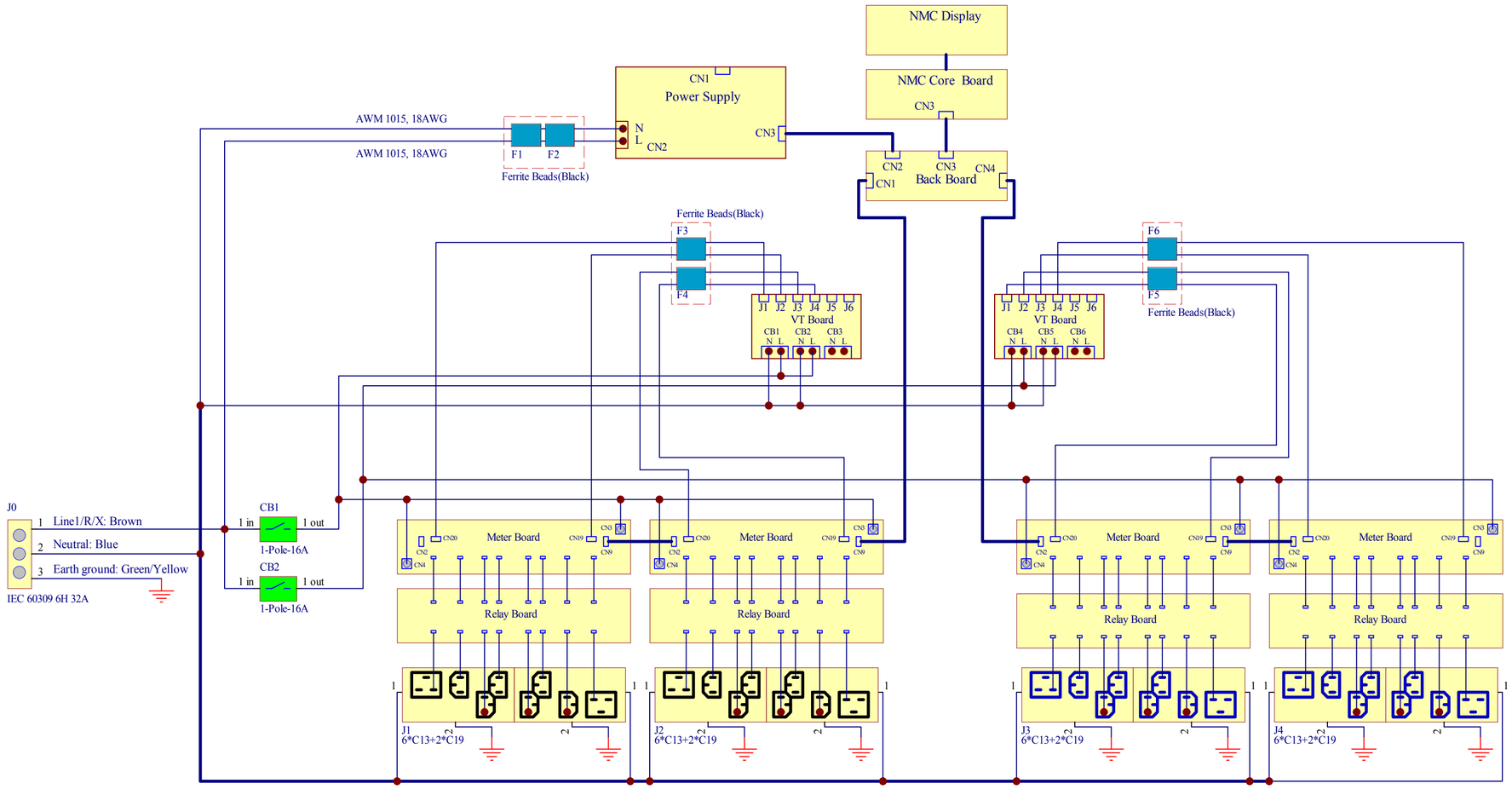

INTERNAL WIRING SCHEMETIC

UNLESS NOTED, DIMENSIONS IN MILLIMETERS & TOLERANCES ARE:

X.	± 1	MM	X°	± 1°
X.X	± 0.5	MM	X.X°	± 0.5°
X.XX	± 0.20	MM		
ØX.X	± 0.4	MM		
ØX.XX	± 0.20	MM		

BRACKETED DIMENSIONS ARE IN INCHES FOR REFERENCE ONLY

THIRD ANGLE PROJECTION

IF 2D AND 3D DIFFER, 2D SHALL TAKE PRECEDENCE

DESIGNER & DATE:	Wanbin Liu 2019-3-26
STANDARDIZATION/CHECKER & DATE:	Hanson Xu 2019-3-28
DFM & DATE:	Talon Lv 2019-3-28
APPROVER & DATE:	Kanson Ren 2019-3-28
ITEM WEIGHT (REFERENCE ONLY):	
MATERIAL:	Assembly

ASIA PACIFIC CIS
WUXI CHINA

DESCRIPTION: EN2.0 PDU

P/N: TA-EN6329

REV: E1

SCALE 1:5 (DO NOT SCALE DRAWING) SIZE: A2 SHEET 2 OF 2