VERTIV™

Liebert®

GXT4™ UPS
5-10kVA
Intelligent, Reliable UPS Protection

Best Protection for Critical Network Applications

Today's converged networks require increased availability and reliability. IT professionals require higher density power protection systems that adapt to mixed load voltages and plug types, while remaining easy to install and maintain.

The Liebert Solution

The Liebert® GXT4™ UPS meets the need for higher power capacities in small spaces.

Efficient, Compact Design

Optimized Operational Expenses
High Efficiency up to 97%
ENERGY STAR Certified.

Flexible Configurations and Design

Multiple Battery and Distribution Options.

Intuitive, Intelligent Operation

Intuitive color LCD Interface
Multiple configuration options.
Standard web cards.

Designed Easy Service and Warranty

Hot -swappable Battery configuration.
Liebert Service provides ultimate peace of mind.

Flexible Monitoring & Management Options

Monitoring and Shutdown software add flexibility to each installation.

The Liebert® GXT4™ a true on-line double conversion UPS system is available in larger capacity models of 5kVA - 10kVA, and features an integrated maintenance bypass, as well as optional extended battery runtime. Plus, Liebert Services provides maximum protection of your UPS. The Liebert® GXT4™ UPS is designed for use in either rack or tower configurations.

As a global leader, 220V, 230V and 240V 50/60 Hz models are offered with CE and C-tick markings.

The Protection you need from Damaging power problems

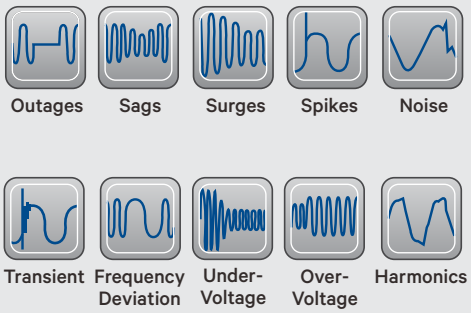

On line, Double Conversion UPS for Ultimate Protection

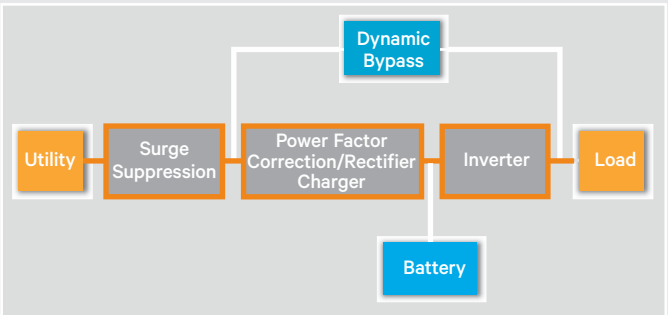

Always Protected !

Pure Sine-Wave

Energy Efficient Design

- Active ECO mode keeps the rectifier and inverter operating, allowing the inverter to remain synchronized to bypass.

This synchronization allows the transfer of the connected equipment to UPS inverter power almost seamlessly if bypass power falls outside the user-set limits.

Once bypass power returns within the acceptable parameters, the UPS will return to Active ECO Mode operation.

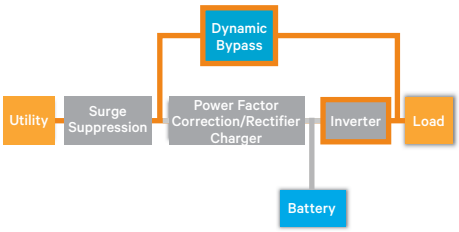

Active ECO mode provides best-in-class efficiency up to 97% without compromise

ENERGY STAR certified UPS models

The UPS products meeting the EPA's requirements, use 35% less energy on an average than their standard counterparts.

LEARN MORE AT energystar.gov

Flexible Configuration

- **Wider input voltage window** allows the UPS to support the critical load without having to transfer to the battery, extending battery life for when it is truly needed.
- **Rack/tower configuration:** The versatile unit can be installed in either configuration and includes a rotating color LCD display.
- **Replaceable hot-swappable** internal batteries provide 4-9 minutes of runtime at full load depending on the model.
- **Additional runtime** with the facility of connecting Up to 6 external battery cabinets. The UPS cabinet support rear panel plug-and-play connections for these battery cabinets. Cabinet sizes: 5kVA ,6kVA and 10kVA-4U.
- **Internal automatic and manual** bypass assures continuity of power to critical loads during system maintenance or in case of an internal fault.
- **Automatic frequency detection** detects and matches line input frequencies of either 60 or 50 Hz and can also be programmed to convert from one to the other.
- **Self-diagnostics attribute** automatically tests unit electronics and batteries. Designed to simplify maintenance and troubleshooting.
- **Arrays of accessories bundled** with standard model (such as Rail kit, IS-webcard etc.), helps to save capital expense.

Flexible Monitoring & Management Options

The Liebert® GXT4™ UPS offers a variety of communication options to provide the monitoring and control capabilities demanded by today's network computing systems.

Operation can be monitored using:

- Liebert IntelliSlot® Web card with suppots SNMP (including SNMPv3) and IPv.6, and web-based management of your UPS
- Liebert Nform™ monitoring Software
- Libert Universal Monitor and Remote Power Monitor Panels
- Libert SiteScan®
- *Trellis*™ Platform
- Third-Party Monitoring Systems
- Built-in contact closure signals. provides dry contact communications to remotely monitor the UPS operating modes.

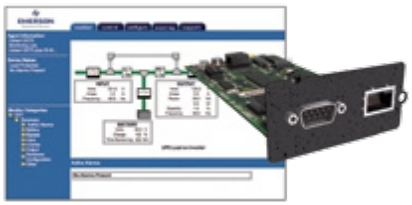

Liebert IntelliSlot Webcard provides SNMP and web-based management

5 and 6kVA Models Offer True On-Line Power In A Convenient Rack Configuration

The Liebert® GXT4™ true on-line, high power density UPS systems provide clean power ideal for business critical applications wherein battery backup power is needed to protect network closets or small data centers against costly downtimes.

Adaptable Design

For installation flexibility, the Liebert® GXT4™ UPS 5 and 6kVA models allow you to choose from several different wiring configurations made possible by the use of removable power distribution boxes (PODs) that simply plug into the rear of the UPS.

The standards box provides terminal blocks for hardwired input and output connections. An optional hardwire version that includes a maintenance bypass

POD configuration with UPS

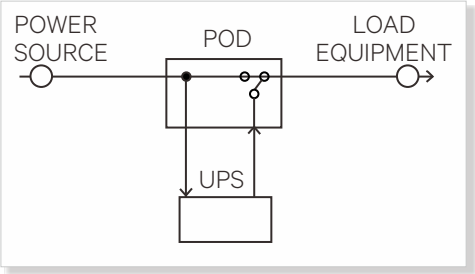

10kVA Model Provide Even More Power

The Liebert® GXT4™ 10kVA units offer a flexible solution for protecting rack-mount equipment, including VoIP and PoE

Specifically designed for use with the new generation of high power switches, these compact UPS systems pack 10kVA (9kW) of power into a 6U rack/tower package with flexible output voltage and optional output distribution. The UPS includes built-in user replaceable batteries that can deliver up to 4 minutes of runtime at full load and optional external battery cabinets to provide maximum flexibility in adding battery runtimes.

The standard 10kVA model includes terminal blocks for hardwired connections of both input and output. The bundled power distribution module provides 4x IEC-C19 receptacles for blade servers or high-end networking switches and 4 x IEC C13 receptacles.

Hot - Swappable Operation

Liebert® GXT4™ UPS 10kVA units feature three bays for one power modules and two battery modules. The chassis contains a bypass switch that allows all modules to be removed without powering down the connected load.

5 and 6kVA Models

10 kVA Models

Removable Maintenance Bypass and Power Distribution Box

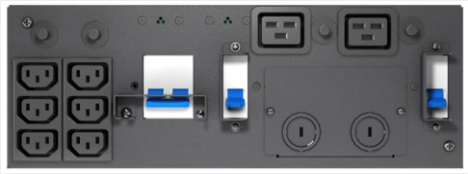

For 5/6 kVA

For 10 kVA

Intuitive and intelligent Operation

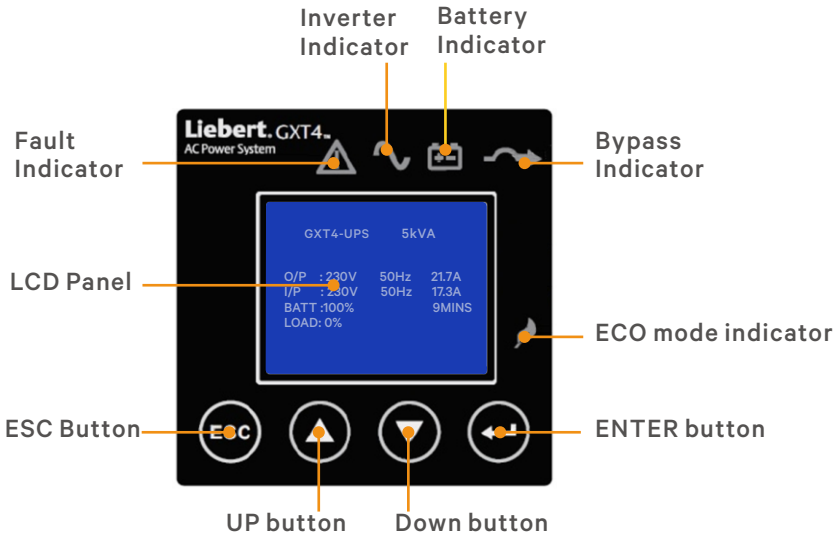

Rear View 5-6kVA

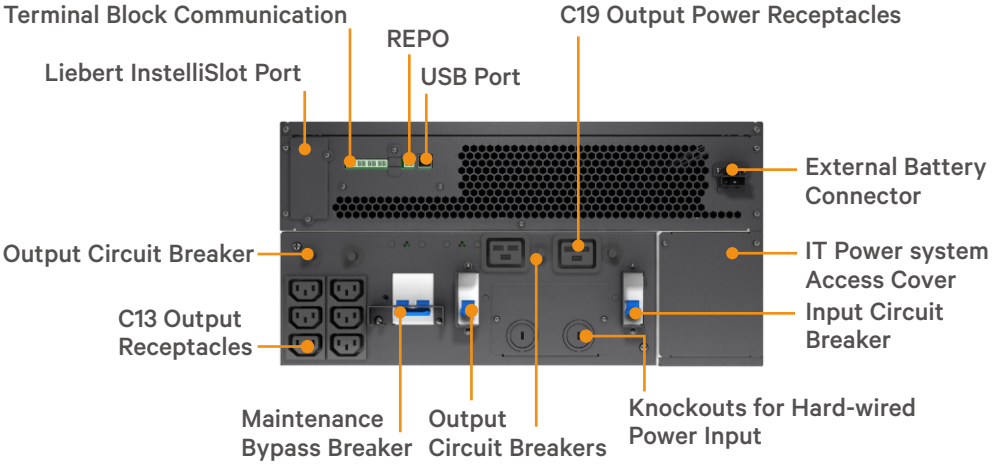

Rear View 10kVA

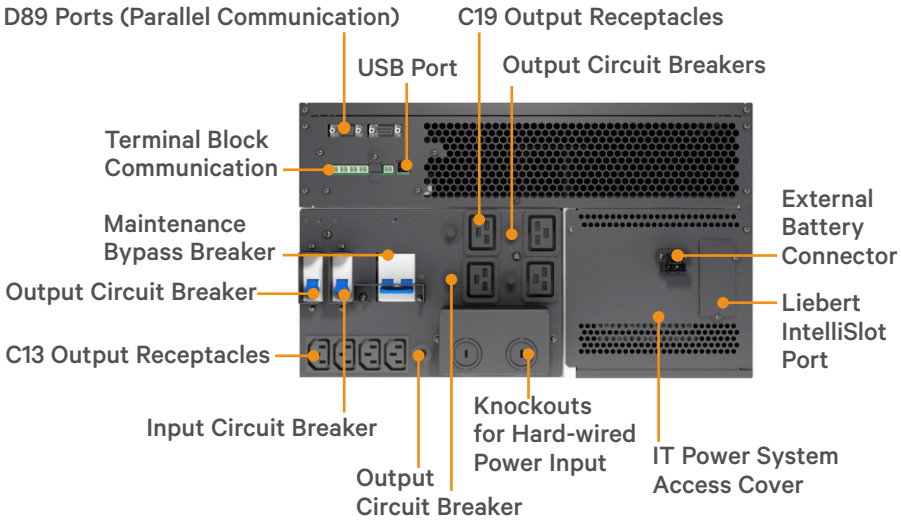

Our Extended Service packages offer you complete peace of mind

While today's smaller, rack-based UPS system offer relatively trouble-free operation, the growing criticality of the systems they support has increased the cost of downtime. As a result, the need to maintain these smaller UPS systems has become increasingly important.

Extended Warranty

Choose additional of 1-year or 2-year warranty on top of the 2-year standard warranty for worryfree maintenance and total peace of mind.

Start-up

On-site system startup by a certified Vertiv customer engineer ensures that the equipment is up and running at an optimum performance

Preventive maintenance

One or Two visits per year by an Vertiv customer engineer for higher reliability and availability

On-site service

Should you experience a problem, a certified Vertiv customer engineer will be dispatched to repair or replace your equipment. Response is guaranteed.

External Battery Specification

Model Number	GXT4-240VBATT
Used with UPS Model	GXT4-5000RT230; GXT4-6000RT230; GXT4-10000RT230
Dimensions, W x D x H, mm(in)	
Unit (with bezel)	430 x 581 x 173 (16.9 x 22.9 x 6.8)
Weight, kg (lb)	
Unit	65 (143.3)
Battery Parameters	
Type	Valve-regulated, non-spillable, lead acid
Quantity x V	1 x 20 x 12V
Environmental	
Operating Temp, °C (°F)	0 to 40 (32 to 104)
Storage Temp, °C (°F)	-15 to 50 (5 to 122)
Relative Humidity	0-95% non-condensing
Operating Elevation	Up to 1000m (3280.83 ft.) at 25°C (77°F)
Agency	
Safety	IEC62040-1:2008 version
Transportation	ISTA Procedure 1E

Internal Battery			
Load (%)	5kVA	6kVA	10kVA
10	95	86	99
20	42	38	44
30	36	31	25
40	29	23	17
50	24	17	13
60	18	13	10
70	14	11	7
80	12	9	6
90	11	7	4
100	9	7	4

Internal Battery +1 External Battery Cabinet			
Load (%)	5kVA	6kVA	10kVA
10	273	249	209
20	143	116	105
30	107	86	63
40	80	61	44
50	64	45	34
60	49	36	26
70	38	29	21
80	33	24	17
90	29	21	14
100	24	18	12

Internal Battery +2 External Battery Cabinet			
Load (%)	5kVA	6kVA	10kVA
10	476	431	327
20	254	207	164
30	191	158	103
40	146	113	76
50	119	89	56
60	94	69	44
70	72	56	37
80	63	47	29
90	56	42	24
100	47	37	22

Internal Battery +3 External Battery Cabinet			
Load (%)	5kVA	6kVA	10kVA
10	689	627	450
20	374	299	221
30	274	226	141
40	211	165	105
50	173	130	82
60	137	105	65
70	111	88	53
80	97	73	43
90	88	64	37
100	74	58	33

Internal Battery +4 External Battery Cabinet			
Load (%)	5kVA	6kVA	10kVA
10	910	824	574
20	499	397	282
30	363	297	179
40	277	216	134
50	225	173	106
60	182	141	85
70	148	118	71
80	130	99	57
90	118	90	48
100	100	82	43

Internal Battery +5 External Battery Cabinet			
Load (%)	5kVA	6kVA	10kVA
10	1143	1033	695
20	626	498	345
30	455	371	217
40	345	268	164
50	281	213	129
60	224	176	106
70	184	148	87
80	163	125	74
90	148	114	60
100	125	103	55

Internal Battery +6 External Battery Cabinet			
Load (%)	5kVA	6kVA	10kVA
10	1367	1248	826
20	750	601	409
30	547	448	257
40	416	322	192
50	338	256	151
60	270	210	125
70	217	177	106
80	196	151	87
90	178	138	75
100	152	124	68

** Run times in this table ara approximate. They are based on new, fully charged standard battery modules at a temperature of 25 °C (77 °F) with 100% resistive UPS loading. Run times listed above can vary by ±5% due to manufacturing variances of the batteries.*

Specifications

Parameters	GXT4-5000RT230	GXT4-6000RT230	GXT4-10000RT230
Rating	**5000VA/4000W**	**6000VA/4800W**	**10000VA/9000W**
Mechanical			
Dimension, mm (in) (W x D x H)	430 x 574 x 217 (16.9 x 22.4 x 8.5)		430 x 581 x 261 (16.9 x 22.9 x 10.3)
Weight, lb (kg)	132.2 (60)		154.3 (70)
Input AC			
Nominal Operating Frequency	50 or 60Hz (Factory Default is 50Hz)		
User-Configurable	220/230/240VAC		
Operating Voltage Range	176 - 280VAC		
Input Frequency Operation	40-70Hz		
Output AC			
Frequency	50HZ or 60Hz, Nominal		
VAC(Factory Default)	230VAC		
Waveform	Sinewave		
Main Mode Overload	>200% for 5 cycles; 151-200% for 1 seconds; 121-150% 10seconds;105-130% 1 minute		
Environment Parameters			
Temp	0°C to +40°C (+32°F to 104°F)		
Storage Temp	-15°C to +50°C (5°F to 122°F)		
Operating Elevation	Up to 1000m (3281 ft.) at 25°C (77°F) without derating		
Audible Nosie	<55 dBA, at 1 meter from the rear <50 dBA,at 1 meter from the front or sides		
Relative Humidity	0% to 95%, non-condensing		
Battery			
Type	Valve-regulated, nonspillable, lead acid		
Qty x V x Rating	20 x 12V		
Recharge Time (Internal Batteries)	5 hours to 90% capacity after full discharge into 100% load		
Agency			
Safety	IEC62040-1:2008 version, GS mark		
EMI/EMC/C-Tick EMC	IEC 62040-2 2nd Ed		
ESD	IEC/EN EN61000-4-2, Level 3, Criteria B		
Radiated Susceptibility	IEC/EN EN61000-4-3, Level 3, Criteria A		
Electrical Fast Transient	IEC/EN EN61000-4-4, Level 3, Criteria B		
Surge Immunity	IEC/EN EN61000-4-5, Level 4, Criteria B		
Transportation	ISTA Procedure 1E		

Power distribution specifications

Model Number	PD2-CE6HDWRMBS	PD2-CE10HDWRMBS
Amp Rating	32 Amps	63A
Input Power Connection	Single-phase (L-N-G) hardwired, 6-10mm^2 (8-10AWG)	
Output Power Connection	Single-phase (L-N-G) hardwired, 6-10mm^2 (8-10AWG)	
Includes(Manual Bypass Switch With Indicator Lamps)	Two IEC 320 C19 16A/250V Sockets Six C13 10A/250V Sockets	Four IEC 320 C19 16A/250V Sockets Four C13 10A/250V Sockets
Input Branch Circuit Breaker Supplied by User	32A	63A

Note : Specifications are subject to change without any prior notification.

VertivCo.com | **Asia Pacific**

© 2017 Vertiv Co. All rights reserved. Vertiv and the Vertiv logo are trademarks or registered trademarks of Vertiv Co. All other names and logos referred to are trade names, trademarks or registered trademarks of their respective owners.
While every precaution has been taken to ensure accuracy and completeness herein, Vertiv Co. assumes no responsibility, and disclaims all liability, for damages resulting from use of this information or for any errors or omissions.
Specifications are subject to change without notice.

AP-UPS-GXT4-V3-1118-EN